HIT SPORT

PORTABLE BASKETBALL UNIT

Product code:MSC007



Table of Contents

POLE CARE AND SYSTEM MAINTENANCE 3

GENERAL SAFETY INSTRUCTIONS 5

PART LIST.....6

ASSEMBLY STEPS

STEP 1 10

STEP2 11

STEP 3 12

STEP 4 13

STEP 5.....14

STEP 6.....15

STEP 7.....16

STEP 8 17

STEP 9 18

STEP 10.....19

STEP 11.....20

STEP 12.....21

How to move basketball 22

How to adjust the height.....23

WARNING 24

POLE CARE AND UNIT MAINTENANCE

The life of your basketball unit depends on many variables. The climate, exposure to corrosives such as salt, pesticides or herbicides, and excessive use or misuse can all contribute to pole failure, which may cause property damage and/or personal injury.

Check your basketball unit frequently for loose hardware, excessive wear, and signs of corrosion. For safety reasons, and to prolong the life of your basketball unit , you must take the following preventative measures.

1. Check all nuts and bolts. If any are loose, tighten them.
2. Check all parts for excessive wear and tear. If necessary, replace any parts that have been worn or damaged through usage. Contact our Customer Service Department for replacement parts.

3. Check all pole sections for visible rust or chipped or cracked paint. If present do the following:
   a) Use an emery cloth to completely remove any rust or chipped paint.
   b) Clean the area with a damp cloth and allow it to dry.
   c) Apply two coats of a rust preventative, high gloss enamel paint to the area. Allow the paint to dry between coats.

IF RUST HAS PENETRATED THROUGH THE POLE ANYWHERE, REPLACE IMMEDIATELY!

WARNING!!!
NEVER OPERATE THE PORTABLE BASKETBALL UNIT WITHOUT FILLING UP THE MOULDED BASE WITH WATER OR SAND FULLY.

GENERAL SAFETY INSTRUCTIONS

* Do not hang from the rim or climb on the pole.
* Do not climb on the base or structure in general as this could result in serious personal injuries.
* Adjustments and moving of the basketball unit must be carried out by adults.
* Always check the unit to ensure that the moulded base is full of water or sand, and all fittings and hardware are tight before each use.
* Always place the base on a flat surface.
* Do not let water freeze in the base.
* Two people are required for assembly.
* Keep the manual for future reference

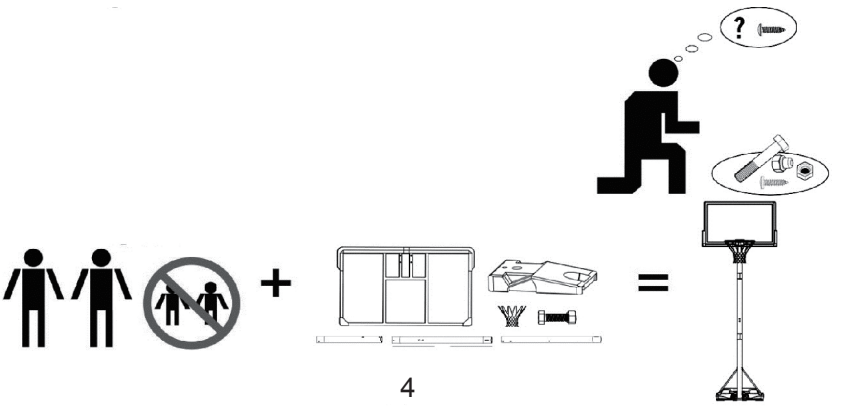

Part List

Part #, Description, Picture, Quantity

1  Bottom Pole Φ75*1090mm QTY:1	2  Middle Pole Φ75*1090mm QTY:1
3 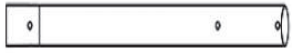 Top Pole Φ75*835mm QTY:1	4  Bottom Pole Brace Φ19*975mm QTY:2
5  Lower handle bar 28*28*900mm QTY:1	6  Upper handle bar 32*32*960mm QTY:1
7  Short backboard connecting tube Φ30*495mm QTY:2	8  Long backboard connecting tube Φ30*695mm QTY:2

Part List

Part #, Description, Picture, Quantity

9 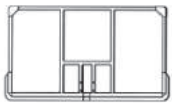 Backboard QTY:1	10  Rim Φ16*450mm QTY:1
11  Net QTY:1	12 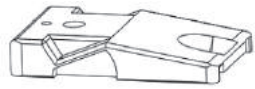 Base QTY:1
13  Backboard Connecting Plate QTY:2	14  Bolt, Washer and Screw Set M8*45mm QTY:1
15 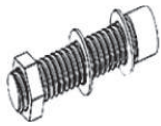 Bolt, Washer and Screw Set M10*40mm QTY:4	16  Bolt, Washer and Screw Set M8*25mm QTY:2

Part List

Part #, Description, Picture, Quantity

17 26 27  Bolt, Washer and Screw Set M8*90mm QTY:2	17  Bolt, Washer and Screw Set M8*90mm QTY:3
18  Bolt, Screw M12*160mm QTY:2	19 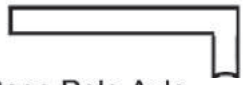 Base Pole Axle Φ10*210mm QTY:1
20  Middle pole mounting plate QTY:1	21  wheel Φ95*70mm QTY:2
22  Wheel axle Φ12*145mm QTY:2	23  Tube washer short size Φ13*Φ16*20mm QTY:2

Part List

Part #, Description, Picture, Quantity

24 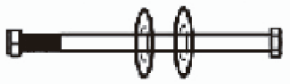 Bolt, Screw M12*160mm QTY:1	25  Bolt, Washer and Screw Set M8*85mm QTY:4
28  Short Spring Φ12*Φ16*18mm QTY:2	29  Bolt, Washer and Screw Set M8*60mm QTY:2
30 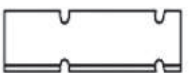 Pole Cover 1380*345mm QTY:1	32 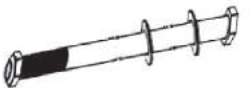 Bolt, Screw M12*55mm QTY:4

Tools Kit, Outils Kit

a	10*13mm wrench 10*13mm clé		1pc	Include intégrer	d	M12 wrench M12 clé		1pc	Include intégrer
b	14*17mm wrench 14*17mm clé		1pc	Include intégrer	e	M8 wrench M8 clé		1pc	Include intégrer
c	17*19mm wrench 17*19mm clé		1pc	Include intégrer	f	M10wrench M10 clé		1pc	Include intégrer

Step 1

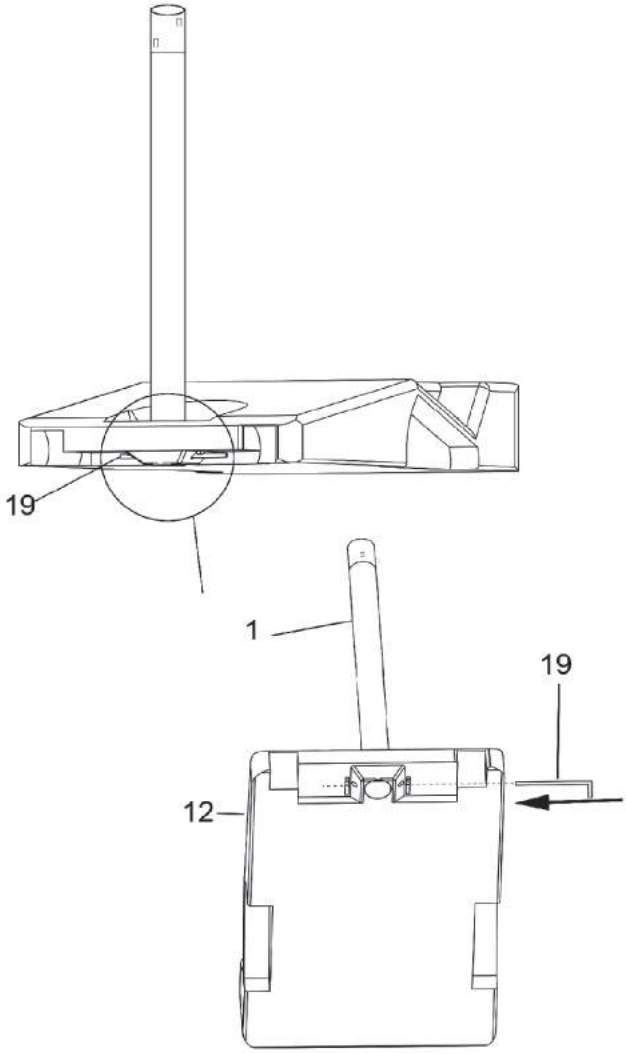

Step 2

TOOLS NOT INCLUDED (HAMMER)


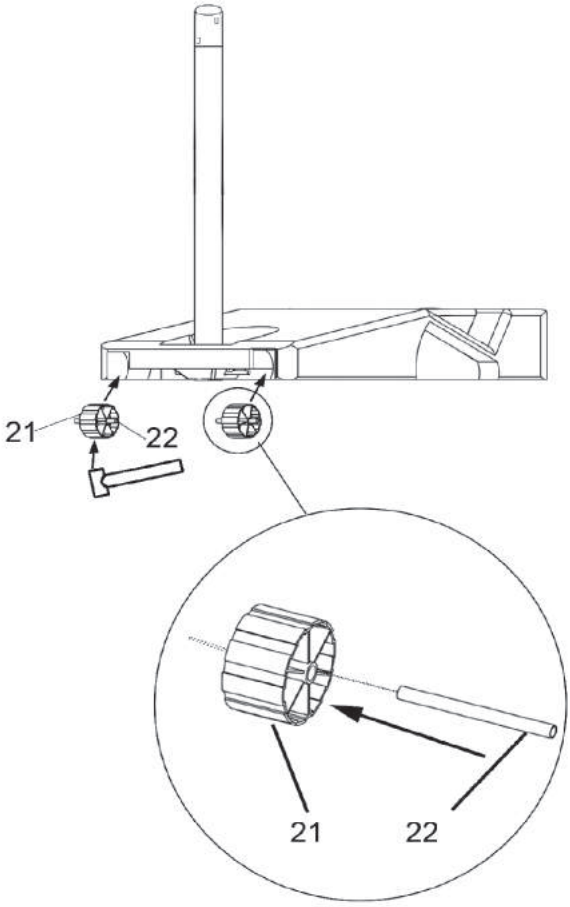

DETAIL

Step 3

A

TOOLS NEEDED	
	14x17mm
	M8

PART NEEDED	
⑯ 	M8*25mm QTY:2

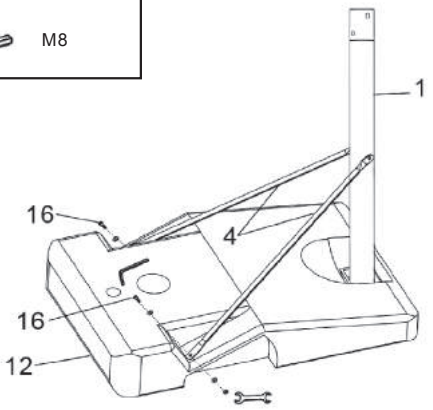

B

TOOLS NEEDED	
	10x13mm
	M8

PART NEEDED	
⑰ 	M8*90mm QTY:1

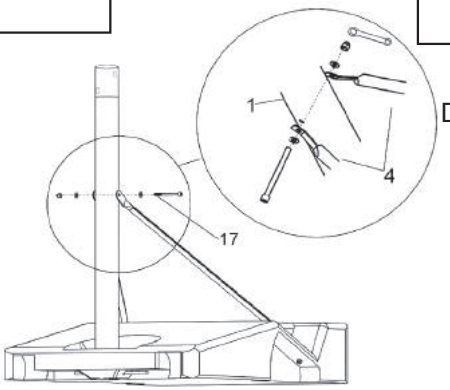

DETAIL

Step 4

TOOLS NEEDED
 10x13mm
 M8

PART NEEDED
⑰  M8*90mm QTY:2

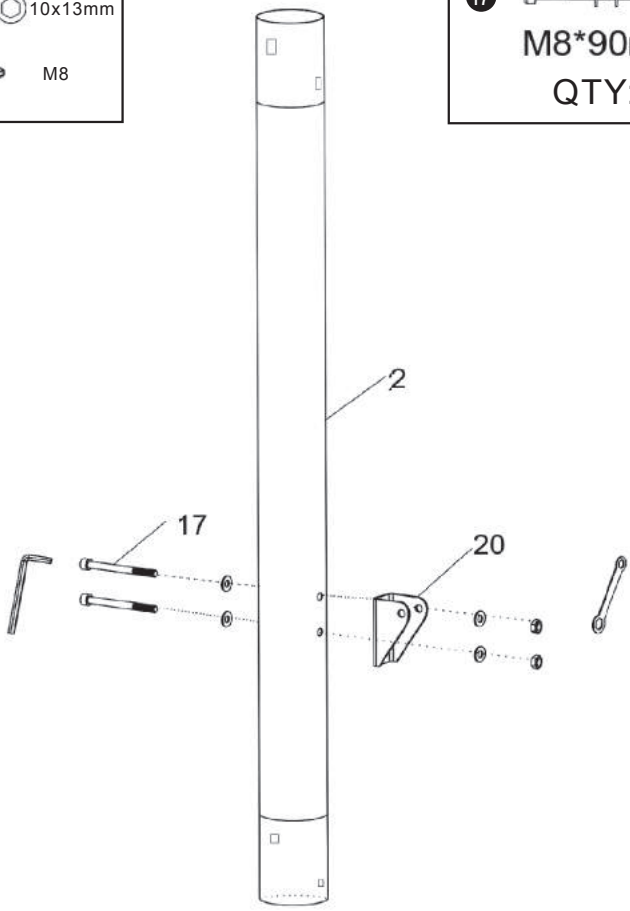

Step 5

TOOLS NEEDED
 10x13mm

PART NEEDED
 25 M8*85mm QTY:2

Step 6

TOOLS NEEDED
10x13mm

PART NEEDED
25 M8*85mm QTY:2

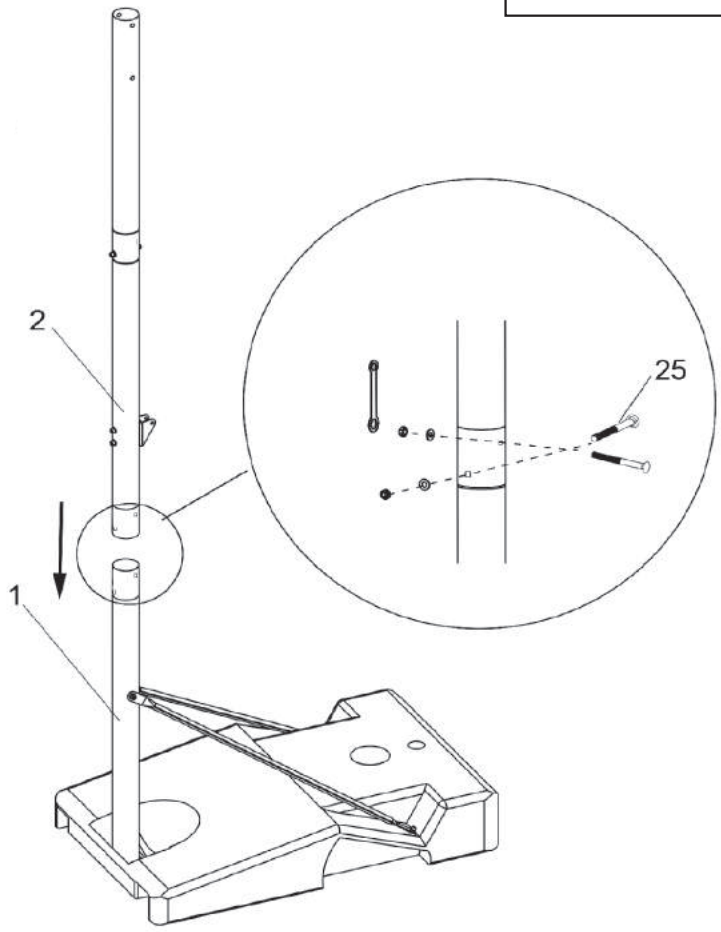

Step 7

TOOLS NEEDED	
	10x13mm
	M8

PART NEEDED	
29	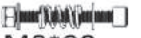 M8*60mm QTY:2
17 26 27	 M8*90mm QTY:2

Step 8

TOOLS NEEDED	
	M10mm
	14x17

PART NEEDED
15  M10*40mm QTY:4

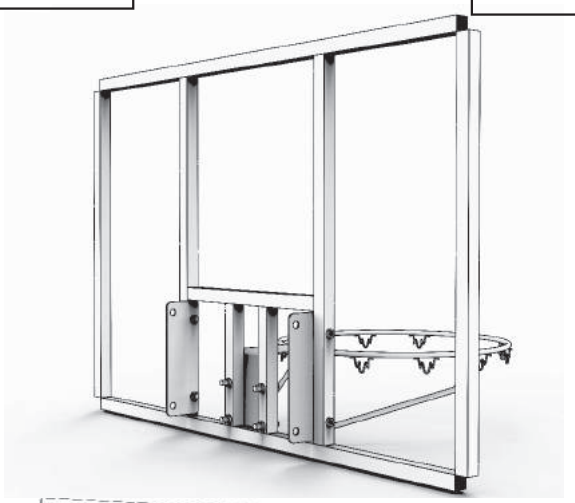

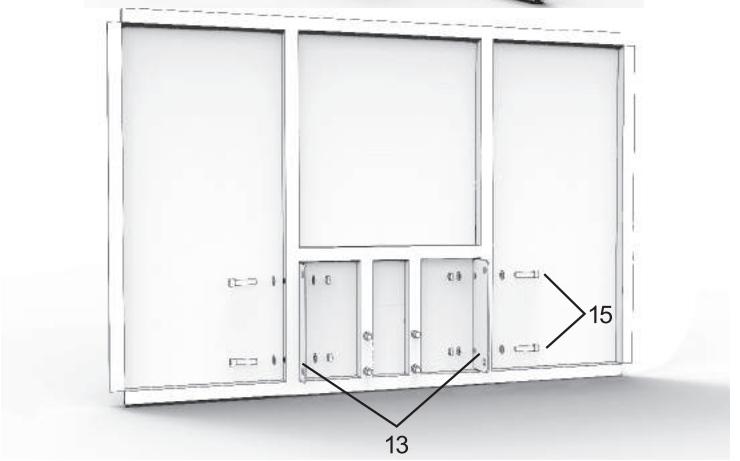

Step 9

TOOLS NEEDED
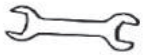 14x17mm
 17x19mm

PART NEEDED
32  M12*55mm QTY:4

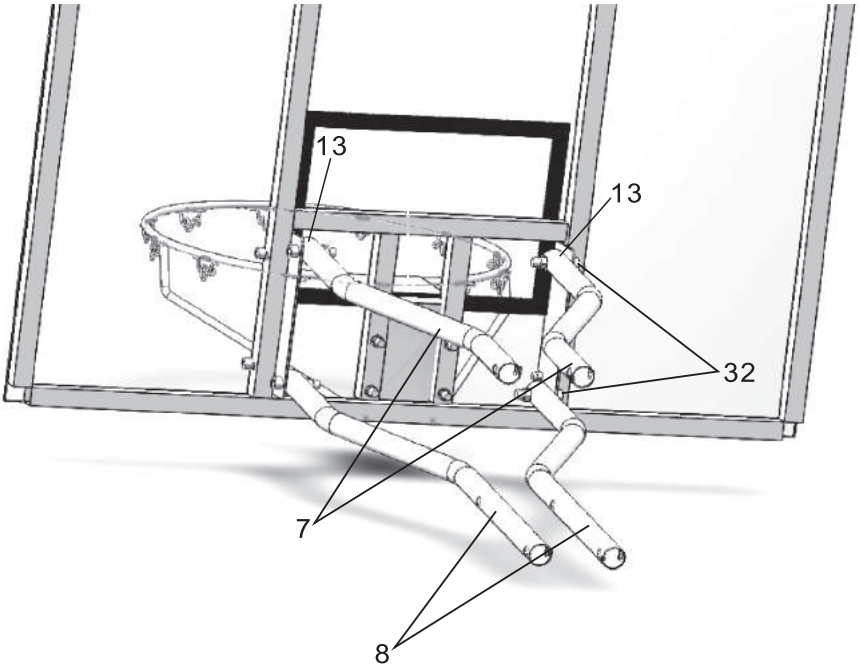

Step 10

TOOLS NEEDED	
	17x19mm
	M12

PART NEEDED	
18 	M12*160mm QTY:2

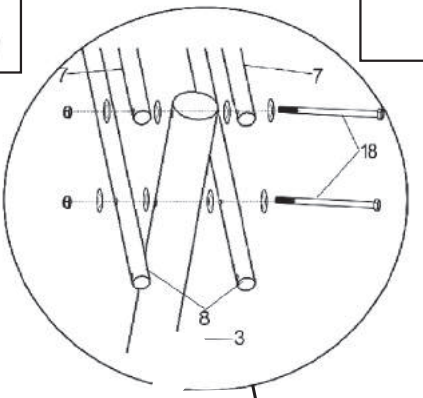

DETAIL



Please do not tighten the screws before completing all installation.

Step 11

TOOLS NEEDED
M8 M12
17x19mm 10x13mm

PART NEEDED
14 M8*45mm QTY:1
18 M12*160mm QTY:1

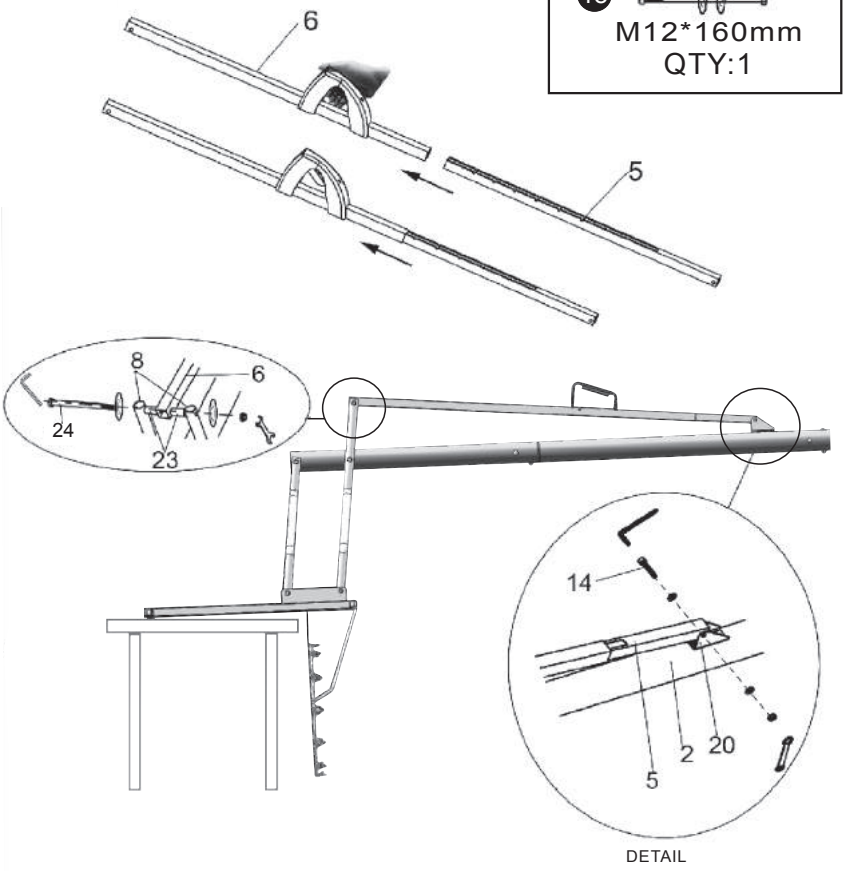

DETAIL

Step 12



WARNING

*Once installation is complete , check th e entire unit to ensure all parts have been adequately tightened.

*Ensure the base is fully filled with either 115KG of Sand or 105KG of Water.

*Wrap pole cover #30.

WARNING
When the base is filled with water or sand, players must check the leakage of the base, to prevent base instability, leading to injury.

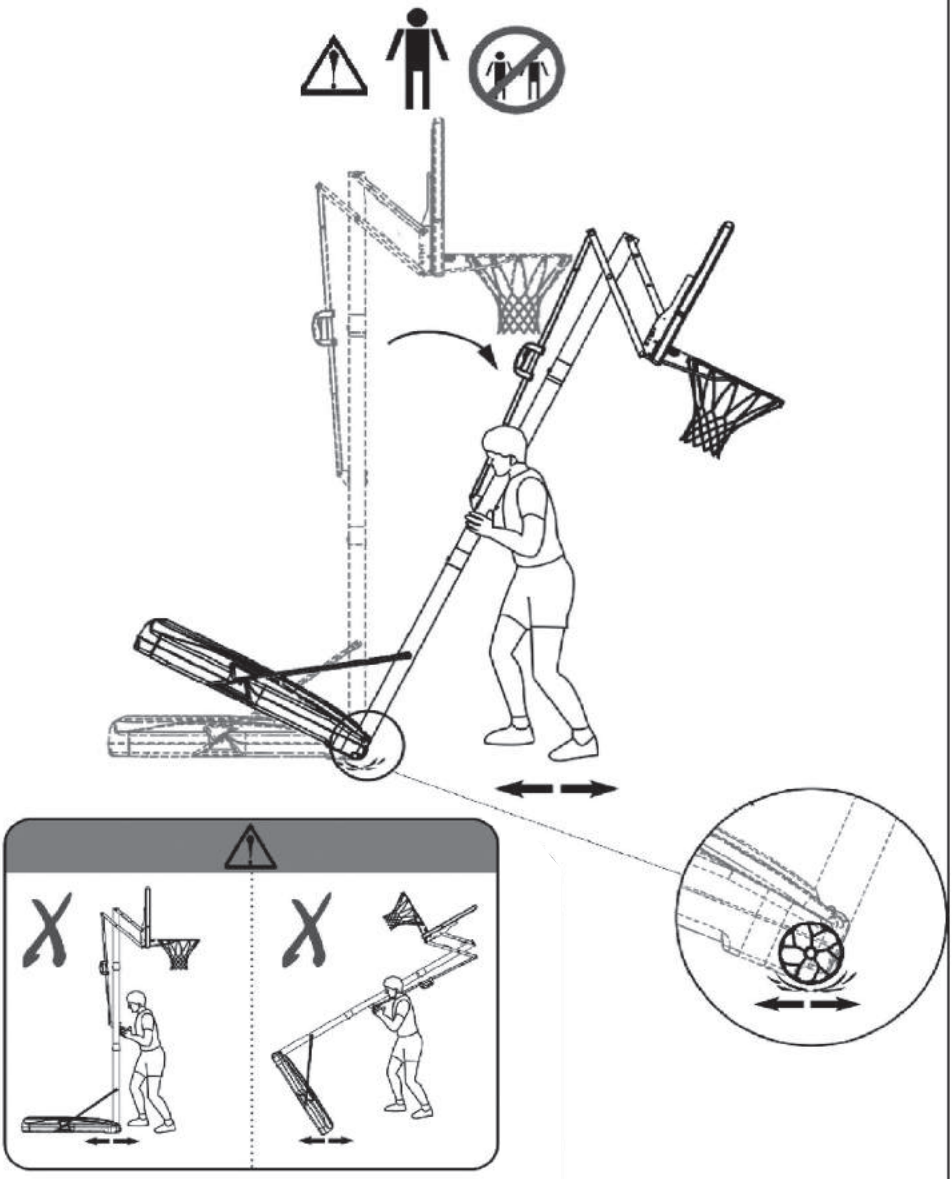

WARNING
Moving of the basketball unit must be carried out by adults.
Be sure to follow the correct way of moving, avoid the following two incorrect ways.

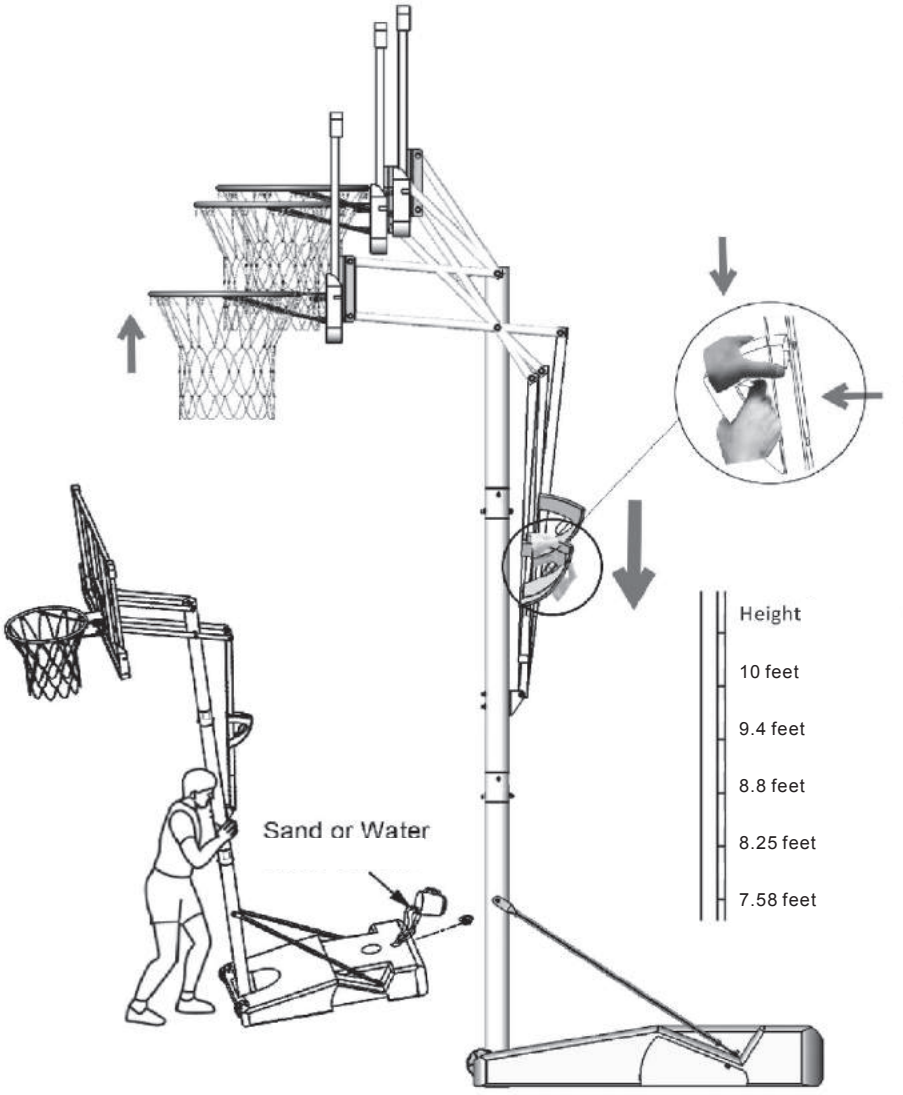
Height
10 feet
9.4 feet
8.8 feet
8.25 feet
7.58 feet
Sand or Water

WARNING

THOSE WHO ASSEMBLE AND USE THE UNIT MUST READ, UNDERSTAND
AND COMPLY WITH ALL THE FOLLOWING AND THE OWNER MUST ENSURE
THAT ALL PLAYERS KNOW AND FOLLOW THE RULES FOR THE SAFE OPERATION
OF THIS UNIT .
THE UNIT MUST BE REMOVED AND ASSEMBLED ONLY BY ADULTS WHO CAN SAFELY HANDLE THE WEIGHT.

1. Before assembling the unit , the assembler must read all instructions carefully and ensure that all parts are present.
2. Before building the basketball unit , you will need to choose a flat piece of ground void of any obstacles that could cause harm to the players.
3. Before using the unit , the players must first check the stability of the base. The ground under the base should be free of sharp objects that could cause the base to leak. The base should be filled with the appropriate amount of sand or water, as outlined in the instruction manual.
4. Do not push or drag the base on the ground, as it may cause damage.
5. This unit should not be used for a formal match. Dunking and hanging from the rim is not advised.
6. Do not wear any form of jewelry, as this may cause injury.
7. Do not use the system in severe weather.
8. Do not climb the pole or hang from the rim.
9. Check the unit before each use for loose or damaged parts.